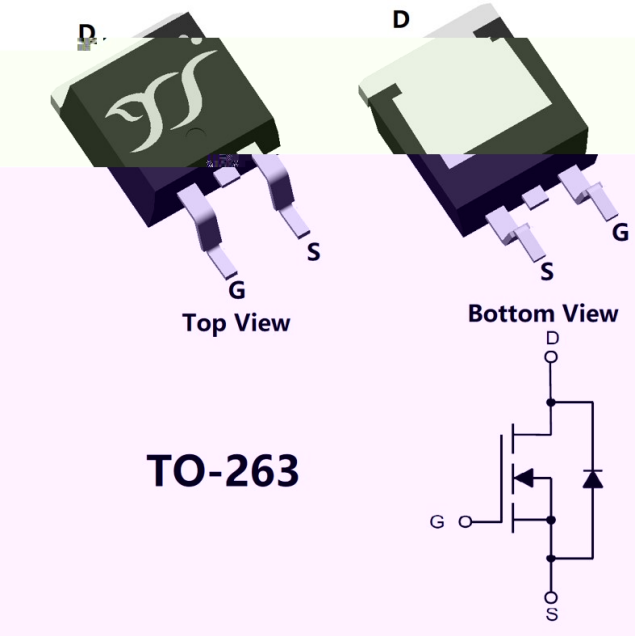
D
D
S
G
G
S
Top View
Bottom View
TO-263
D
G
S

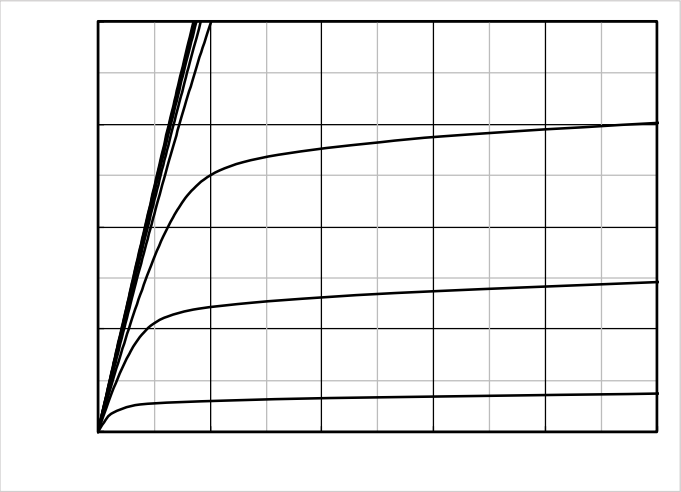

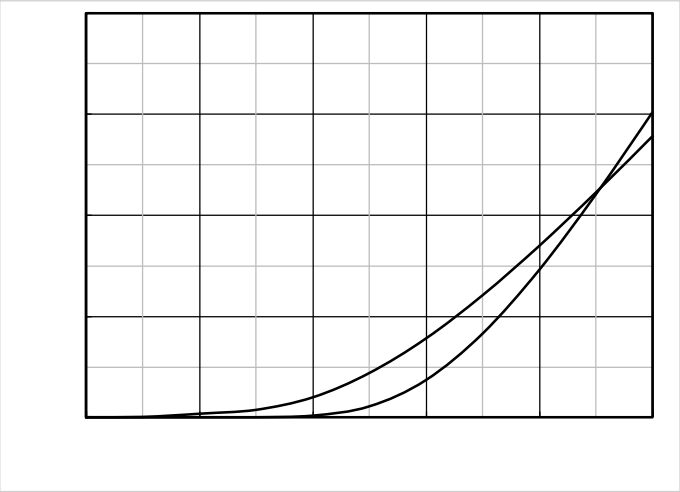

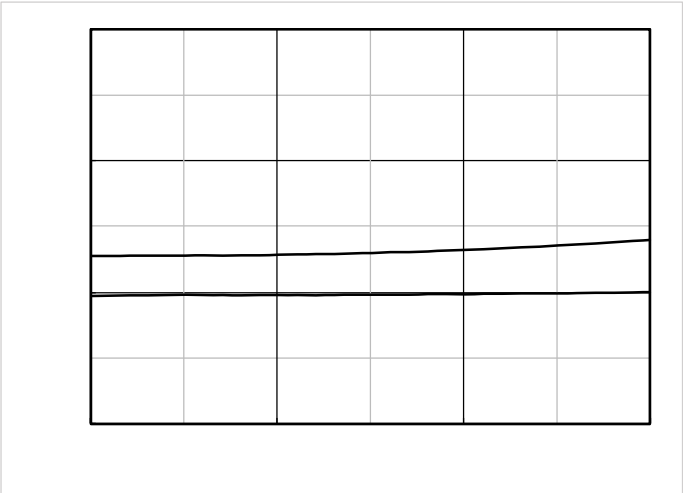

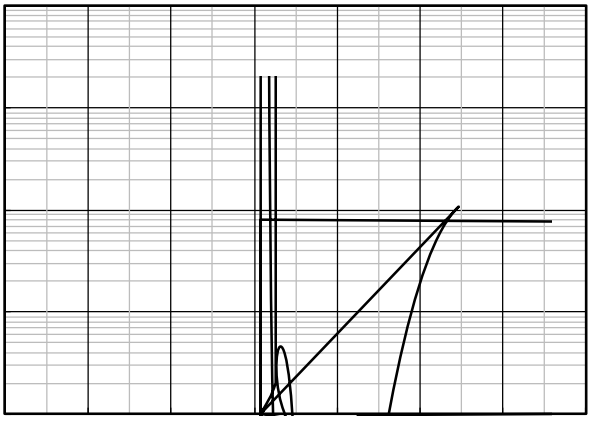

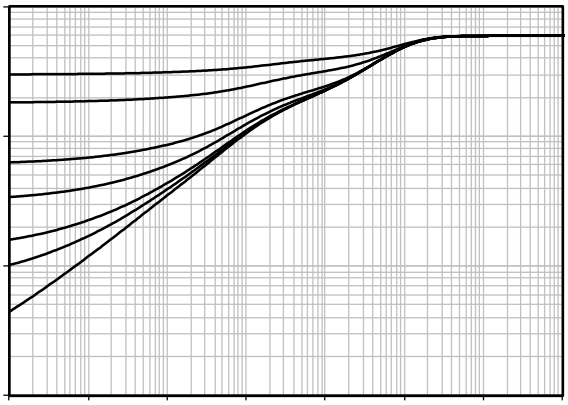

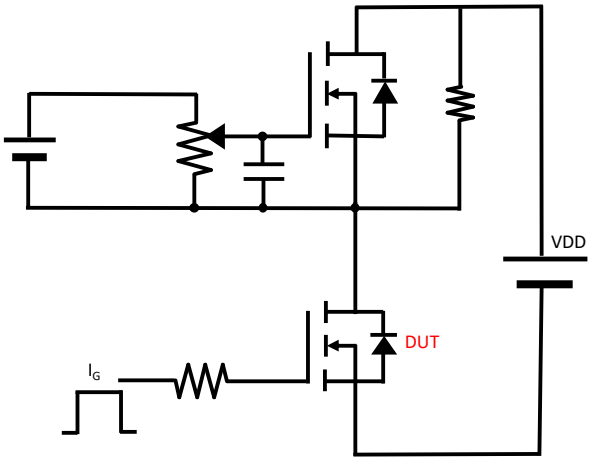
VDD
DUT
I_G

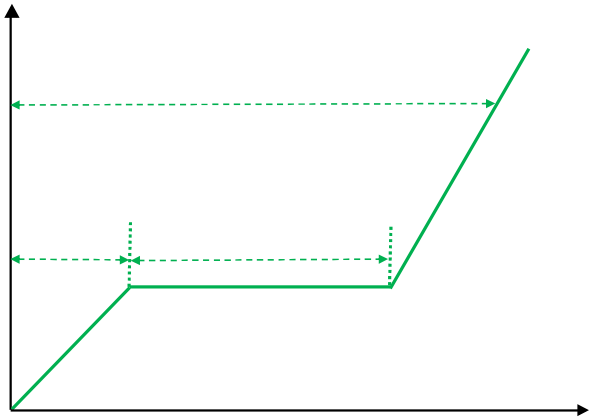

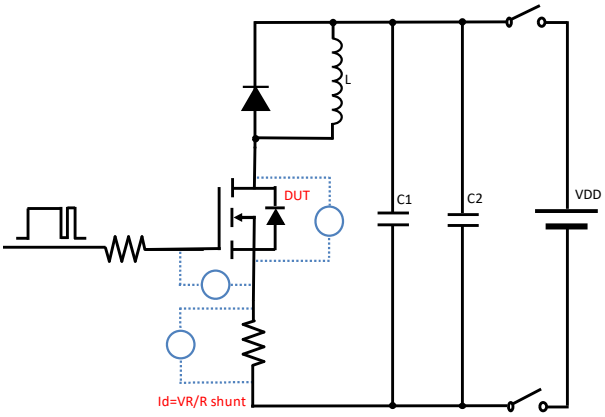
L
DUT
C1
C2
VDD
Id=VR/R shunt

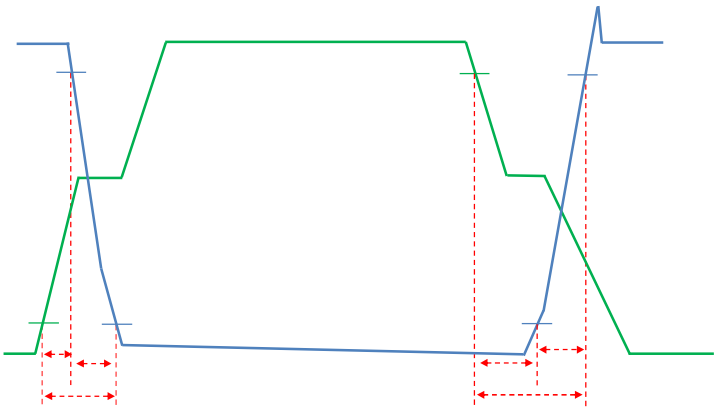

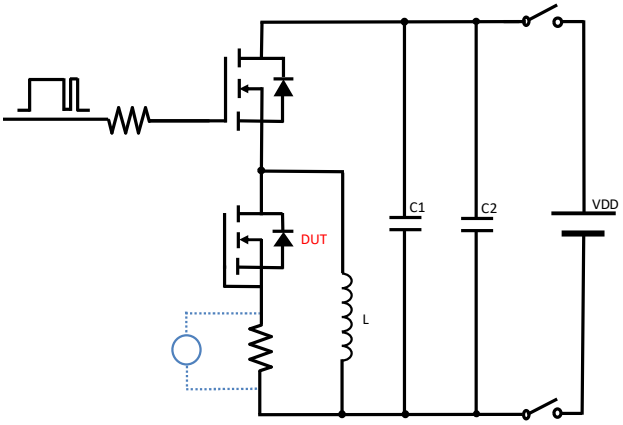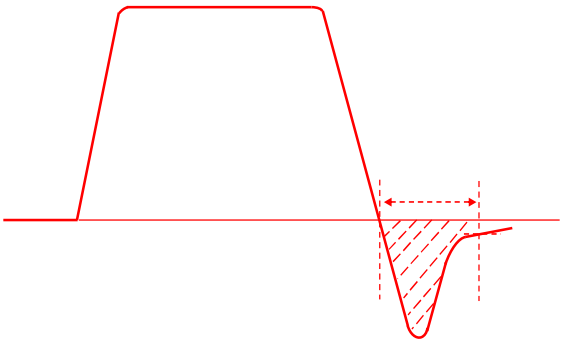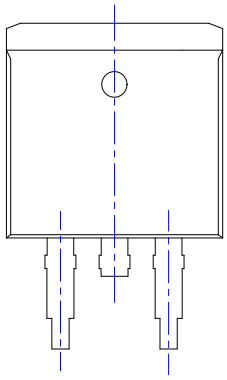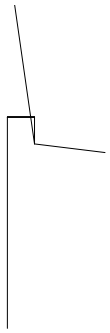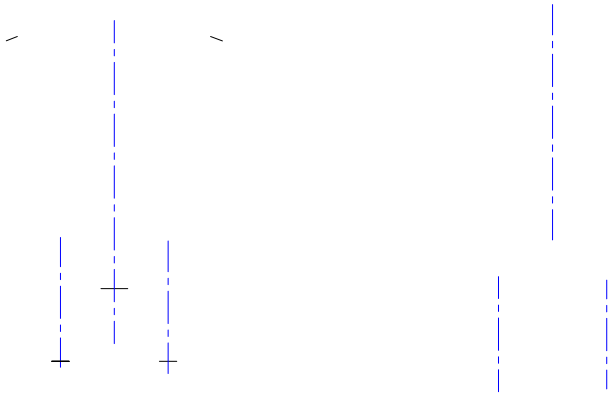
C1
C2
VDD
DUT
L